SteakAger

DRY AGED BEEF

FINEST QUALITY

ORIGINAL USER GUIDE

Now that you have purchased a SteakAger product, you can be confident knowing that as well as our 1-year parts and labor warranty. Please retain proof of purchase in order to obtain warranty services. Warranty begins from original date of purchase.

READ ALL INSTRUCTIONS BEFORE USE For your safety and continued enjoyment of this product, always read the instruction manula before use.

CONTENTS

1 Introduction

2 Important Safety Instructions

3 The Steakager Original Assembly

4 Features and Functions

5 Operating Instructions

6 Cleaning and Maintenance

7 Warranty Terms and Conditions

INTRODUCTION

Congratulations!

You have made an excellent choice with the purchase of this SteakAger product. You can be confident this SteakAger product has been manufactured to the highest standards of performance and safety, and is supported by the team at SteakAger.

We want you to be completely satisfied with your purchase of this SteakAger product, which is backed by a comprehensive manufacturer's 1 year warranty and ongoing support through our After Sale Support Team.

If you require technical support or in the unlikely event your product was received damaged, please contact us through www.thesteakager.com and we will provide a responce within 1 business day.

Product claims made within the 1 year warranty period will be repaired and/or replaced free of charge provided you have satisfactory proof of purchase (keep your receipt). This limited warranty does not apply in cases of damage caused by accident, improper use, abuse or force majeure.

This limited warranty will be invalidated if the appliance is tampered with in any way whatsoever. In case of questions or technical problems please contact us through www.thesteakager.com and we will provide a responce within 1 business day.

If the appliance is returned, it must be packed correctly, as we cannot accept responsibility for damage caused in transit. We recommend using a traceable, insured delivery service.

SAFETY INSTRUCTIONS

IMPORTANT SAFEGUARDS

THIS APPLIANCE IS FOR HOUSEHOLD USE ONLY

WARNING: When using electrical appliances especially when children are present, basic safety precautions should always be followed to reduce the risk of fire, shock, and/or injury to persons, including the following:

Read all Instructions.

AVOID ELECTRICAL SHOCK. DO NOT immerse cord, plug or the SteakAger in water or other liquid.

UNPLUG the SteakAger from outlet when not in use or before cleaning. DO NOT add or remove parts while running.

Never touch or obstruct the rear vent during operation, ensure minimum clearance is 1” at back of SteakAger

Children should not use the SteakAger unsupervised; close supervision is required when appliance is used near or with children

Never touch any moving parts in the product.

Operation of the SteakAger requires it to be placed on a level surface in the refrigerator.

Never operate the SteakAger with a damaged cord or plug that has been damaged in any way. Immediately contact Customer Service for analysis and resolution.

DO NOT add unauthorized attachments.

Use only with factory cord supplied; NEVER add extension cords. Unplug when not in use.

Do not use product for any purpose outside its intended use.

WARNING: This product contains a chemical known to the State of California to cause cancer.

WARNING: This product contains a chemical known to the State of California to cause birth defects or other reproductive harm.

SAFETY INSTRUCTIONS

IMPORTANT SAFEGUARDS

THIS APPLIANCE IS FOR HOUSEHOLD USE ONLY

POWER CORD INSTRUCTIONS

A power supply is provided that is rated for use with your SteakAger DO NOT substitute or replace. If your power cord is damaged, contact Customer Service immediately for analysis and replacement options.

The power cord should be arranged to keep out of reach of children.

Run power cord into refrigerator on the hinge side of the door and arrange in refrigerator so that cord will not be pulled on when accessing the space.

LINE CORD SAFETY TIPS

Never pull or yank on cord or the appliance.

To insert plug, grasp it firmly and guide it into outlet.

To disconnect appliance, grasp plug and remove it from outlet.

Before each use, inspect the line cord for cuts and/or abrasion marks. If any are found, this indicates that the appliance should be serviced and the power cord replaced. Please contact Customer Service.

Never wrap power cord tightly around the appliance, as this could place undue stress on the power cord and cause it to fray and break.

UNPLUG APPLIANCE IF THE POWER CORD SHOWS ANY DAMAGE, IF APPLIANCE WORKS INTERMITTENTLY OR IF IT STOPS WORKING ENTIRELY.

This appliance is not intended for use by persons (including children) with reduced physical, sensory or mental capabilities, or lack of experience and knowledge, unless they have been given supervision or instruction concerning use of the appliance by a person responsible for their safety.

STEAKAGER ORIGINAL ASSEMBLY

PARTS LIST

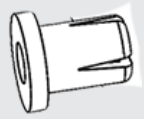

Rivet Sleeve (x12)

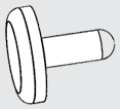

Rivet Pin (x12)

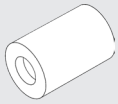

Rivet Cap (x8)

Rivet Cover (x4)

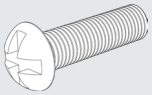

Screws (x2)

Handle

Panels (x2)

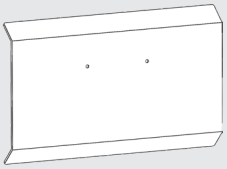

Window

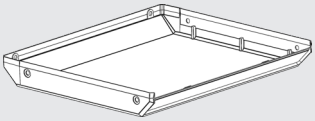

Top/Bottom (x2)

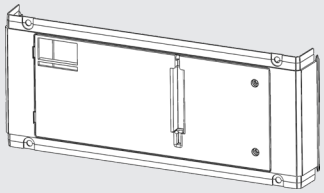

Control Deck

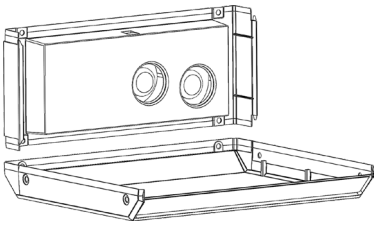

1 Slide control deck into mounting groove on bottom .

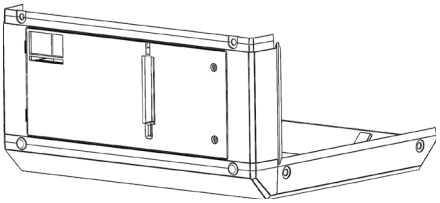

2 Secure control deck with rivet assembly and rivet cover.
*Refer to Rivet Cover Assembly

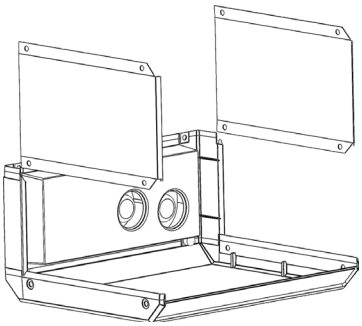

3 Slide left and right stainless steel panels into mounting groove on bottom and control deck.

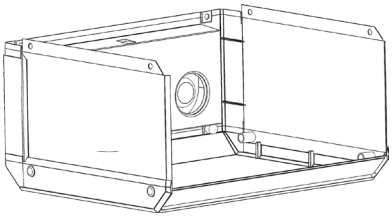

4 Secure side panel with rivet assembly and rivet cap.
*Refer to Rivet Cap Assembly

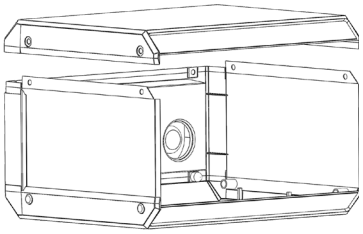

5 Slide top onto unit making sure side panels and control deck are seated in the mounting groove.

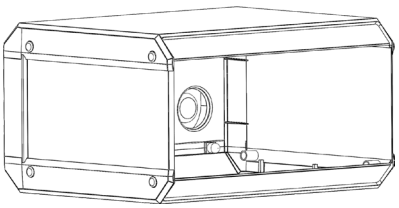

6 Secure top to panels with rivet assembly and rivet cap. Secure top to control deck with rivet assembly and rivet cover.
*Refer to Rivet Cap and Rivet Cover Assembly

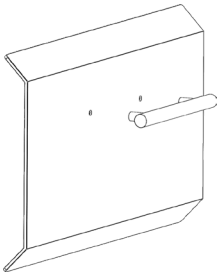

7 Mount handle to window with screws (x2).

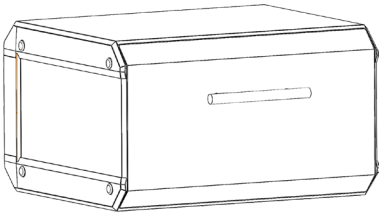

8 Attach window to complete assembly.

STEAKAGER ORIGINAL ASSEMBLY

RIVET COVER ASSEMBLY

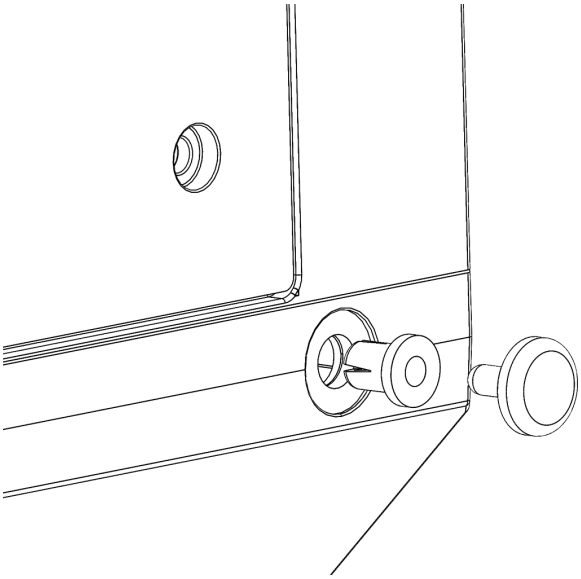

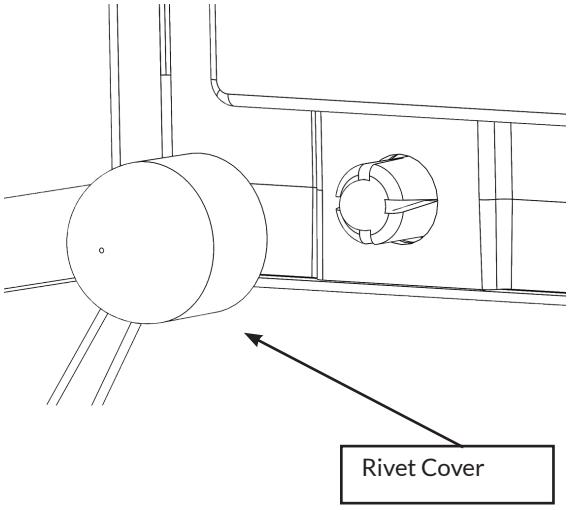

1. Insert rivet sleeve into mounting hole, push in rivet pin to secure assembly.
2. On the other side securely push on rivet cover.

RIVET CAP ASSEMBLY

1. Insert rivet sleeve into hole.

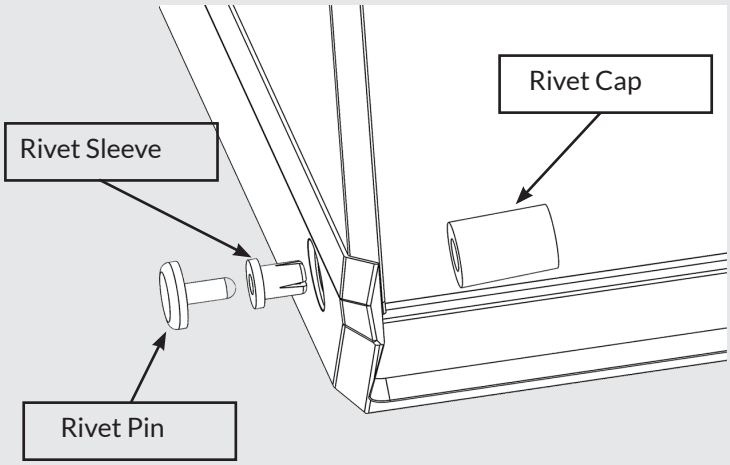

2. Push rivet cap onto rivet sleeve.

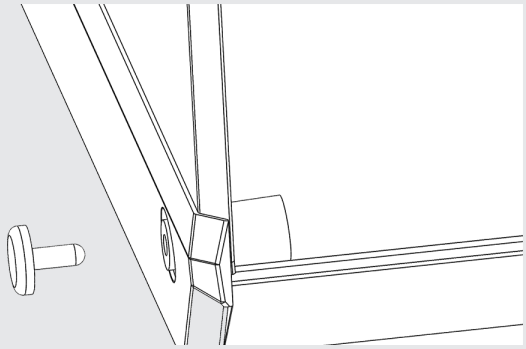

3. Push in rivet pin (pressing rivet cap and rivet pin together) to secure assembly.

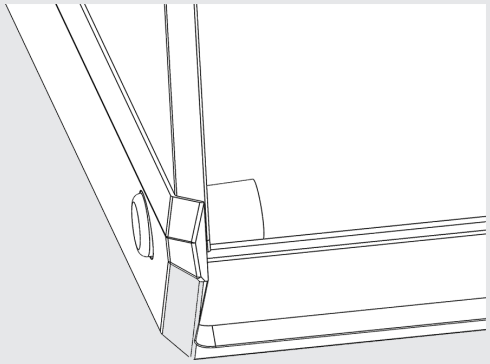

FEATURES AND FUNCTIONS

Housing
The overall housing is constructed of tough ABS plastic and stainless steel to provide years of maintenance free operation.

Stainless Steel Panels
Remove the protective film before assembly.

The Control Deck
Contains all of the controls and functionality systems for your SteakAger. DO NOT immerse in water, wipe clean exterior only.

The Carbon Filter
Is designed to slip into the slot (denoted by decal) at the back of the Control Deck and limits odors from the dry aging process. The filters are replaceable and washable.

The Transparent Window
The process of drying can by observed without opening the door.

Salt Satchel
Designed to absord moisture. Placed below rack, clear of meat.

Assembling the Original
1. Place Bottom on level surface.
2. Disassemble all white snap rivets and separate rivet heads from bases.
3. Place Control Deck, with cable outlet on top and cable hanging down, onto Bottom and align holes.
4. Follow Rivet Instructions and install 2 rivets.
5. Add each Side Panel, align holes and install each rivet.
6. Place Top, align holes and insert all rivets.
7. Mount Handle onto Window.
8. Place Salt Satchel on bottom surface and insert Rack in appliance.
9. Place Window on unit.

OPERATING INSTRUCTIONS

BEFORE FIRST USE

1. Place the SteakAger on a level flat surface that is clean and dry.
2. Wash all surfaces of the appliance with a soft damp cloth and warm, sudsy water.
3. Wash drying rack with a soft damp cloth and warm, sudsy water.
4. Dry thoroughly with paper towel or soft cloth.
5. Read safety instructions.
6. Flatten and place salt satchel in botton of unit and then install rack.
7. Insert carbon filter into slot at rear of unit.
8. Place unit into fridge.
9. Supply power cord wire from hinge side of door.
10. Be sure to leave clearance at back of unit of 1”.
11. Plug the unit in and you will hear a blower begin running which indicates the unit is operational.
12. Exterior exhaust fan only turns on with high humidity.
13. Remove salt satchel and clean unit between uses.

TO CONNECT TO YOUR STEAKAGER

1. Download the SteakAger App from the App Store or Google Play for free.
2. Make sure your appliance is plugged in and running.
3. Follow the App instructions for either iOS, Android or Bluetooth direct connect monitoring of your SteakAger.
4. Through the App you can set the Aging Counter, get recommendations and track the progress through to a delicious dry aged experience.

OPERATING INSTRUCTIONS

GETTING READY TO USE YOUR STEAKAGER Pro 20/40

- Make sure the unit is running and cold before loading cuts of beef
- Purchase a cut of beef of your preference and use our App for quick reference
- Use the rack as a cutting guide for sizing length of cut
- Thoroughly pat dry the beef before placing in the Pro 20/40
- When placing beef in the Pro 20/40 be careful that beef DOES NOT TOUCH ANY SURFACE INSIDE THE APPLIANCE. Use the rack as a cutting guide for sizing length of cut.

NOTES ON GETTING STARTED

Unlike other things you prepare in your kitchen, there is no "done" time with dry aging beef. Your first aging should be an 8-10lb cut of your choice aged for 21-28 days to begin your flavor journey. You will learn a lot from our Facebook Family page and our App. Try different cuts and experiment with different aging times to experience different flavor profiles.

THE VISUAL CHANGES OF DRY AGING BEEF

You'll notice lots of changes during the aging process such as:

- A hardening crust called the pellicle will form.
- Darkening color.
- Shrinkage which mostly occurs in the first 21 days.

Your beef will lose up to 25% of it's starting weight as water is removed during aging.

CLEANING AND MAINTENANCE

BEFORE FIRST USE

- Carefully remove all packaging materials. Remove any glue or tape from your Pro 20/40 before using
- Place unit on a level flat surface that is clean and dry.
- Wash all surfaces of the appliance with a soft damp cloth and warm, sudsy water.
- Wash drying racks with a soft damp cloth and warm, sudsy water or dishwasher. Dry thoroughly with paper towel or soft cloth.
- Before you plug in the Pro 20/40 it is best to let it stand upright for 24 hours to let the compressor oils settle.

BETWEEN AGING CYCLES

- Wash all surfaces of the appliance with a soft damp cloth and warm, sudsy water. Wash drying rack with a soft cloth.
- DO NOT spray water into the appliance.
- Leave the door open to allow for air circulation and to prevent mold and mildew.
- CAUTION: Store the unit out of reach of children. If you have children, you may want to take additional precautions such as removing the door to prevent a child from being trapped inside the unit.
- Leave the door open to allow air movement and to prevent mold growth.

These instructions, additional information , FAQ's and assembly videos can be found online at www.thesteakager.com.

OPERATING INSTRUCTIONS

TIME FOR DELICIOUSNESS!

You've waited long enough and now it's time to experience the finest steaks you've ever had!

- Take the beef from the unit
- Carve off 1/8"-1/4" (3mm-7mm) of the pellicle from each end until you see non hard flesh.
- If you are cooking the roast whole, continue to remove the pellicle from entire surface of the cut. You will quickly see the color change and feel the cutting getting easier at the proper cut point.
- If serving individual steaks, it has been found to be easier to cut steaks and then trim the pellicle from the individual steaks.
- Freeze those extra steaks! Dry aged beef has very little water and they freeze and preserve perfectly.
- CAUTION WHEN COOKING! Dry aged beef has very little water and cooks very quickly so keep your eye on the prize while cooking and use a temperature probe if you can.
- Enjoy!

ATTENTION PLEASE NOTE

- You can only dry age whole cuts of beef – not individual steaks
- The SteakAger is designed to dry age beef only.
- The SteakAger is NOT designed to age fish, chicken, pork, lamb or game meat.
- To reduce risk of cross contamination, do not cut just a few steaks off and place the rest back in you SteakAger.

WARRANTY TERMS & CONDITIONS

Your SteakAger and Our Commitment

We want you to be completely satisfied with your purchase of this SteakAger product, which is backed by a comprehensive manufacturer's 1 year warranty and ongoing support through our After Sale Support Team.

If you require technical support or in the unlikely event your product was received damaged, please contact us through www.thesteakager.com and we will provide a responce within 1 business day. Product claims made within the 1 year warranty period will be repaired and/ or replaced free of charge provided you have satisfactory proof of purchase (keep your receipt). This limited warranty does not apply in cases of damage caused by accident, improper use, abuse or force majeure.

This limited warranty will be invalidated if the appliance is tampered with in any way whatsoever. In case of questions or technical problems please contact us through www.thesteakager.com and we will provide a responce within 1 business day.

If the appliance is returned, it must be packed correctly, as we cannot accept responsibility for damage caused in transit. We recommend using a traceable, insured delivery service.

For Additional Information Online:
https://thesteakager.com/return-policy

PRIVACY POLICY

We never share you information.
For Additional Information Online:
https://thesteakager.com/privacy-policy